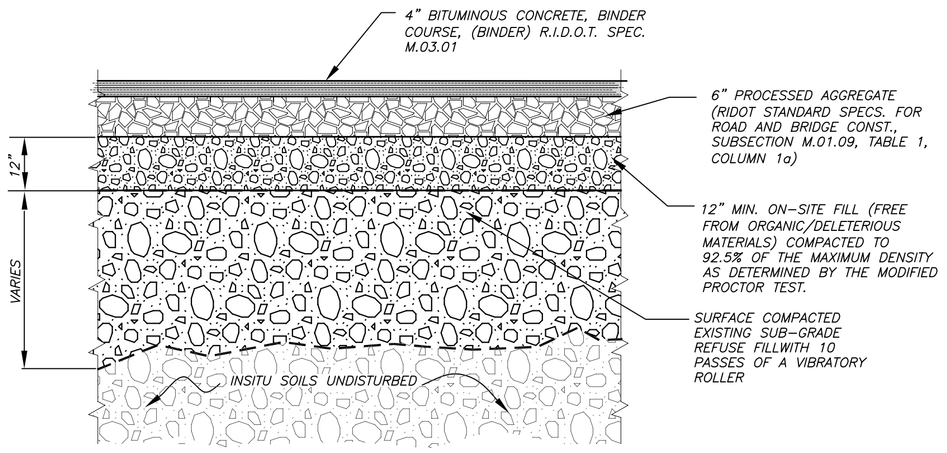

FINAL BIT. CONC. PAVEMENT SECTION

NOT TO SCALE

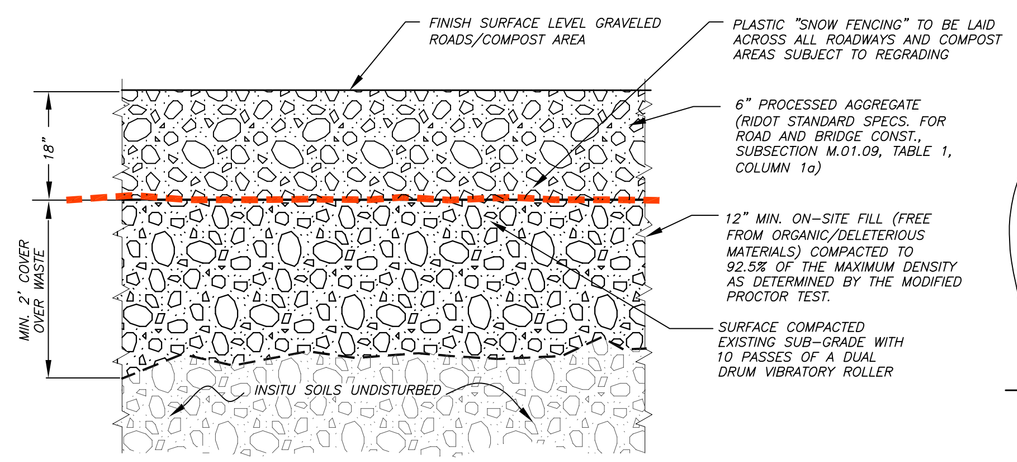

FINAL GRAVEL SURFACING SECTION

NOT TO SCALE

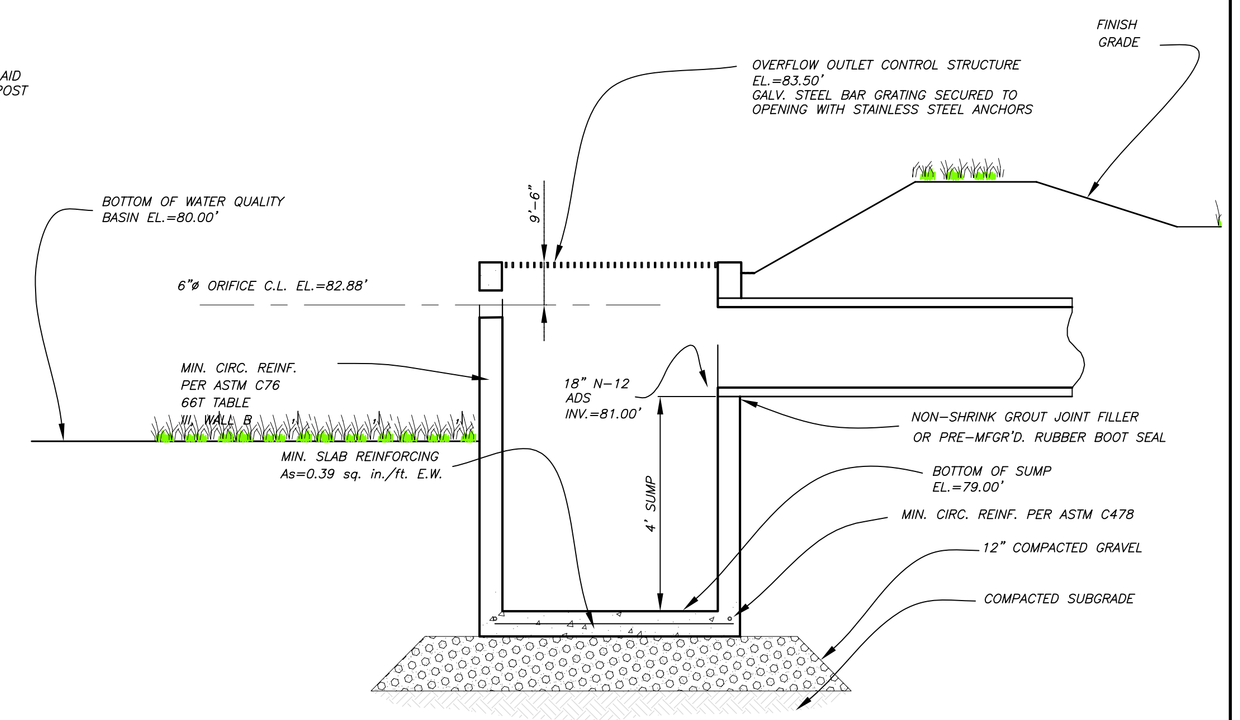

WATER QUALITY BASIN #2 OUTLET DETAL

N.T.S.

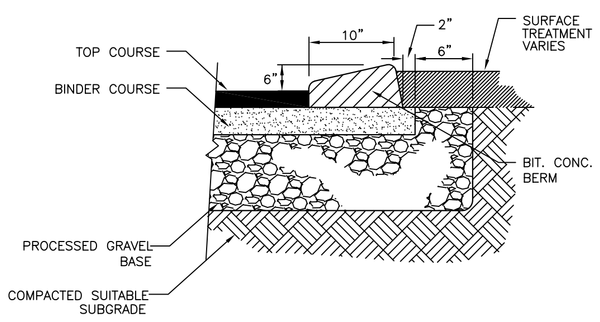

BITUMINOUS CONCRETE BERM

N.T.S.

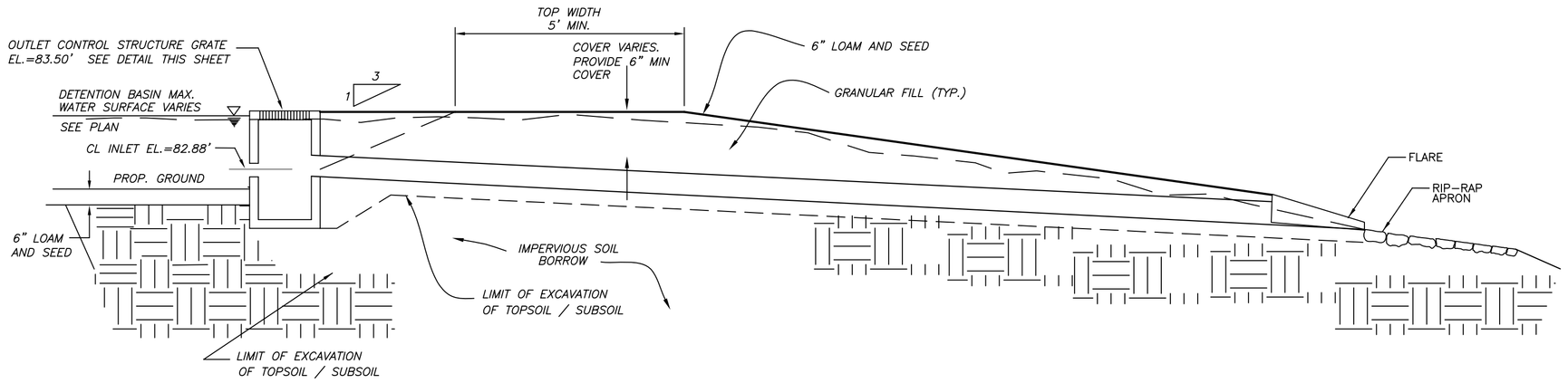

DETAIL BASIN #3 BERM SECTION

N.T.S.

NOTES:

1) UNLESS OTHERWISE NOTED, MANHOLE TAPERS, RISERS, AND BASES SHALL BE FURNISHED IN STRICT ACCORDANCE WITH ASTM DESIGNATION C478 (LATEST) FOR "PRECAST REINFORCED CONCRETE MANHOLE SECTIONS."
2) MANHOLE BASES SHALL BE OF 4,000 psi PRECAST CONCRETE.
3) NO MANHOLE STEPS ARE TO BE PROVIDED.
4) MANHOLE FRAME AND COVER TO SECURED TO FLAT TOP WITH STAINLESS STEEL ANCHORS AS REQUIRED.
5) ALL SECTIONS SHALL BE DESIGNED FOR H.S.-20 LOADING.

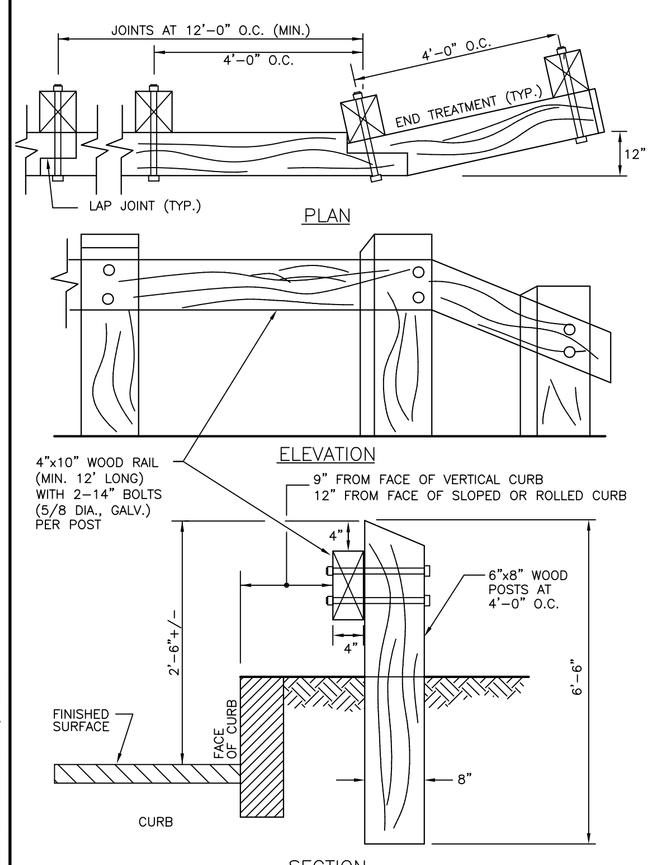

WOOD GUARD RAIL

N.T.S.

DIAMETER OF PIPE D.	TRENCH WIDTH	
	UNSHEETED	SHEETED
12" AND SMALLER	3'-0"	4'-2"

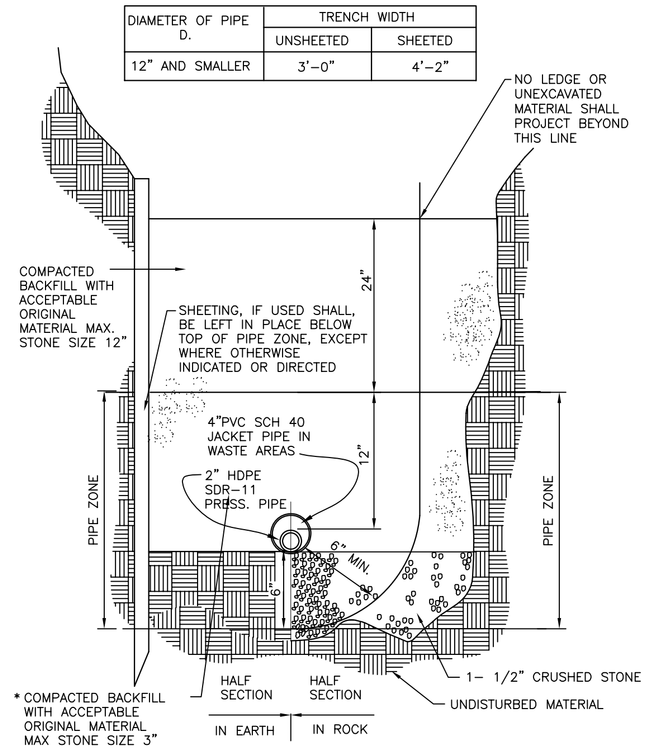

2" PVC WATER MAIN TRENCH SECTION (1-1/4" PVC SEWER MAIN TYPICAL)

N.T.S.

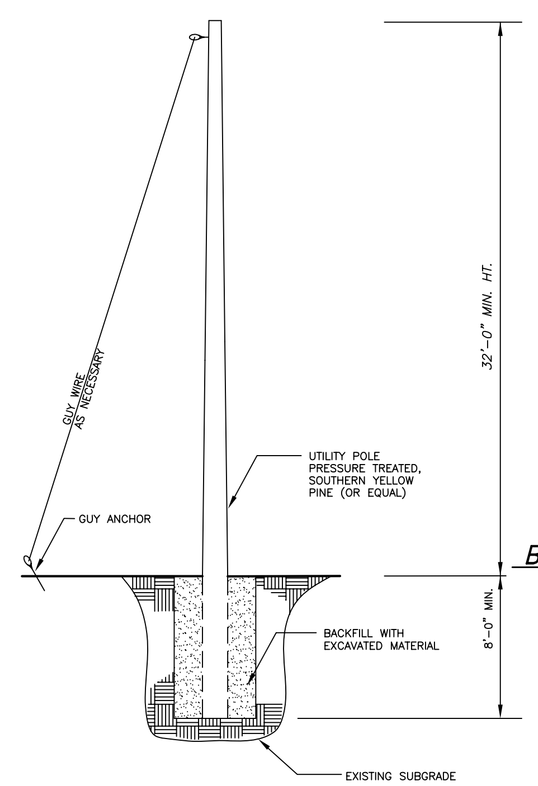

UTILITY POLE

N.T.S.

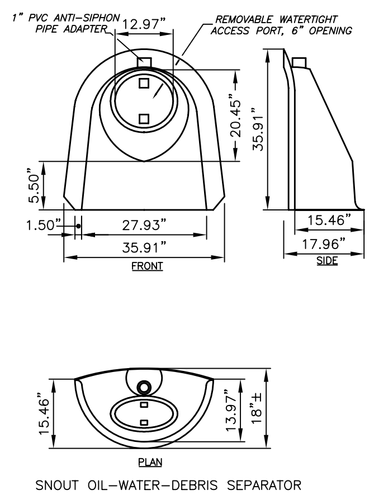

SNOUT OIL-WATER-DEBRIS SEPARATOR
US Patent # 6126817

SEE MANUFACTURER FOR SPECIFICATIONS AND MORE DETAILS

BEST MANAGEMENT PRODUCTS, INCORPORATED TYPICAL "SNOUT" DETAILS

NOT TO SCALE

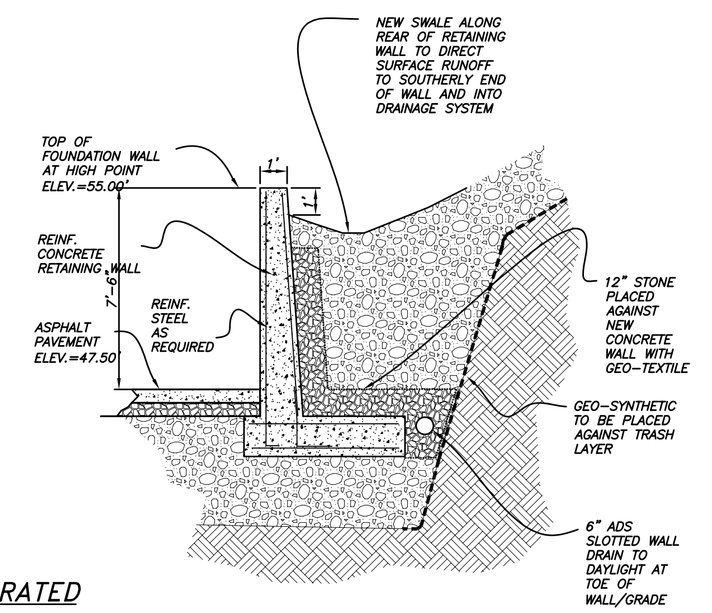

A C3 C8 DRAINAGE SWALE & RETAINING WALL DETAIL

SCALE" 1/4"=1'-0"

PRELIMINARY
NOT FOR CONSTRUCTION
50% SUBMISSION

REV#	DESCRIPTION	BY	DATE
2	PROP. BORING LOCATIONS ADDED	BMM	03/05
1	FRONT ENTRANCE, COMPOST AND CULVERT LOCATIONS	REN	10/04

GZA GeoEnvironmental, Inc.
140 Broadway, Providence, RI 02903
(401) 421-4140 Fax: (401) 751-8613

PROJ. MGR.: TRG
CHK'D BY: SMA
REV'D BY: PPV
DRAWN BY: CRB
SCALE: 1"= 50'
DATE: DEC. 2005

FORMER JAMESTOWN LANDFILL LANDFILL CAP DESIGN

STORMWATER CONTROL STRUCTURES & CIVIL DETAILS

PROJECT NO. 32220.11

FIGURE NO. C-8

SHEET 8 OF 10

© 2004 GZA GeoEnvironmental, Inc.

GZA-N:\32220\32220.11\dwg\C2.dwg [C8] December 23, 2005 - 12:29pm crb